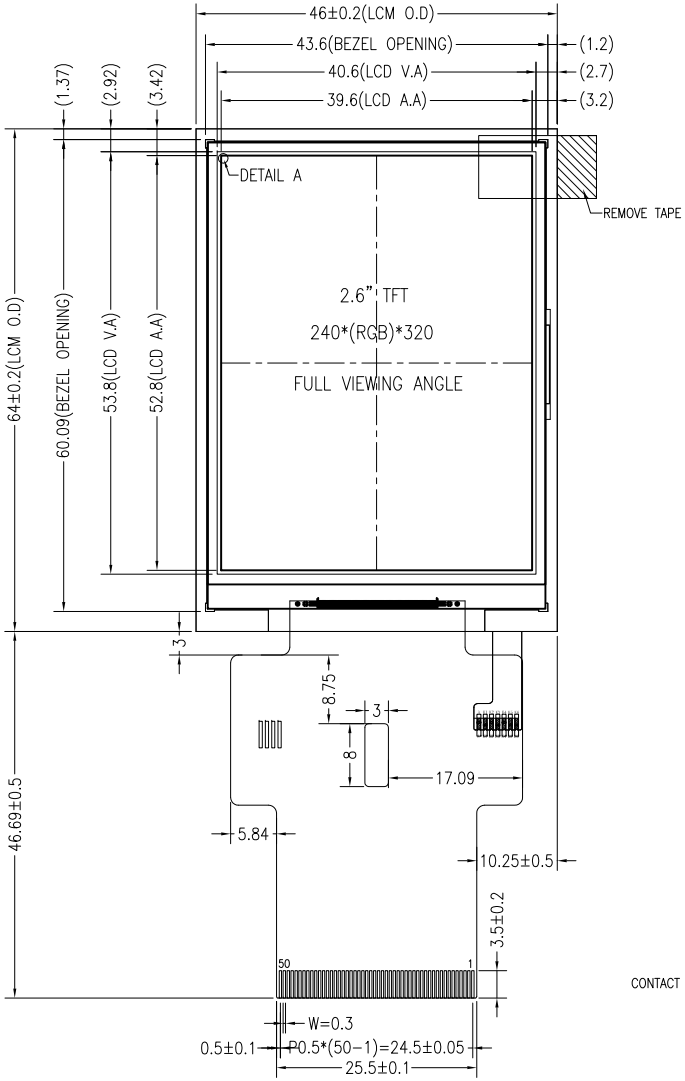


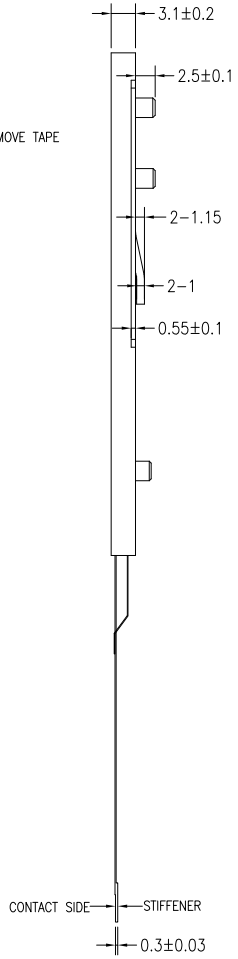


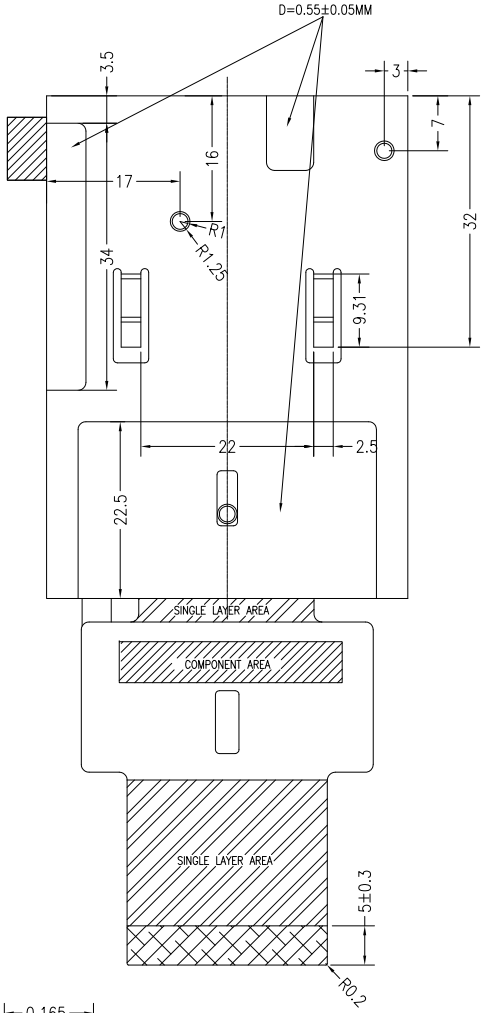


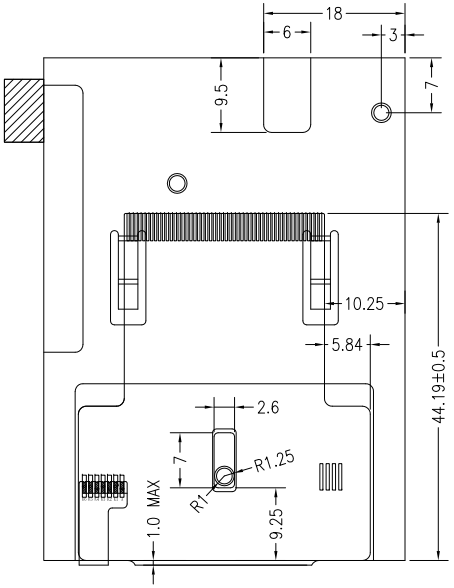


| PIN ASSIGNMENT | |
|---|---|
| NO. | SYMBOL |
| 1 | GND |
| 2 | VDD |
| 3 | VDD |
| 4 | IM2 |
| 5 | IM1 |
| 6 | IM0 |
| 7 | RESET |
| 8 | CS |
| 9 | RS(SCL) |
| 10 | WR(D/C) |
| 11 | RD |
| 12 | VSYNC |
| 13 | HSYNC |
| 14 | ENABLE |
| 15 | DOTCLK |
| 16 | SDA |
| 17 | DB0 |
| 18 | DB1 |
| 19 | DB2 |
| 20 | DB3 |
| 21 | DB4 |
| 22 | DB5 |
| 23 | DB6 |
| 24 | DB7 |
| 25 | DB8 |
| 26 | DB9 |
| 27 | DB10 |
| 28 | DB11 |
| 29 | DB12 |
| 30 | DB13 |
| 31 | DB14 |
| 32 | DB15 |
| 33 | DB16 |
| 34 | DB17 |
| 35 | NC |
| 36 | LEDA |
| 37 | LEDK1 |
| 38 | LEDK2 |
| 39 | LEDK3 |
| 40 | LEDK4 |
| 41 | LEDK5 |
| 42 | LEDK6 |
| 43 | NC |
| 44 | NC |
| 45 | NC |
| 46 | NC |
| 47 | GND |
| 48 | GND |
| 49 | GND |
| 50 | GND |

| IM2 | IM1 | IM0 | MCU-INTERFACE MODE | DB PIN IN USE | |
|---|---|---|---|---|---|
| | | | | REGISTER | GRAM |
| 0 | 0 | 0 | 80 MCU 8-BIT BUS | D[7:0] | D[7:0] |
| 0 | 0 | 1 | 80 MCU 16-BIT BUS | D[7:0] | D[15:0] |
| 0 | 1 | 0 | 80 MCU 9-BIT BUS | D[7:0] | D[8:0] |
| 0 | 1 | 1 | 80 MCU 18-BIT BUS | D[7:0] | D[17:0] |
| 1 | 0 | 1 | 3-WIRE 9-BIT DATA SERIAL | SDA:IN/OUT | |
| 1 | 1 | 0 | 4-WIRE 8-BIT DATA SERIAL | SDA:IN/OUT | |

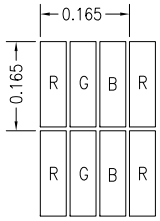


DETAIL A
(SCALE: 40:1)

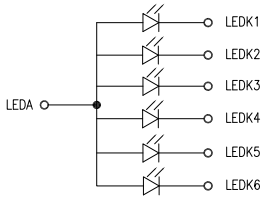


BACKLIGHT CIRCUIT DIAGRAM

NOTES:

1. DISPLAY TYPE: TFT, TRANSMISSIVE, NORMALLY BLACK
2. OPERATING VOLTAGE: VDD=2.8V (TYP.)
3. VIEWING DIRECTION: FULL VIEWING ANGLE
4. DRIVER IC: ILI9341V
5. OPERATING TEMP.: -20°C ~ 70°C
6. STORAGE TEMP.: -30°C ~ 80°C
7. LED BACKLIGHT: 6-CHIP WHITE LED, IF=120mA, VF=3.2V
8. SURFACE LUMINANCE: 350CD/M^2 (TYP.)
9. TOP POLARIZER SURFACE TREATMENT: ANTI-GLARE
10. THE SINGLE LAYER AREA OF FPC IS BENDABLE AND THE BENDING RADIUS MUST BE NOT LESS THAN 1.5MM
11. GENERAL TOLERANCE: ±0.2MM
12. ROHS COMPLIANT

| VER. | REVISED DESCRIPTION | REVISER | DATE |
|---|---|---|---|
| 01 | FIRST ISSUE | CAROL | 2017.06.26 |

MULTI-INNO TECHNOLOGY CO., LTD.

| | | | |
|---|---|---|---|
| DRAWN BY: | CAROL 2017.06.26 | | MODULE P/N: MI0260ET-1 |
| CHECKED BY: | | SCALE : 1/1 | |
| APPROVED BY: | | UNIT: mm | DESCRIPTION: TFT MODULE |
| VERSION NO: | 01 | SHEET NO.: 1/1 | |